eLEARN

ALZACRISTALLI ANTERIORI

191 - Giulietta

FRONT ELECTRIC WINDOWS - DESCRIPTION

The electric windows for the doors are operated through the switches on the driver's side door (both windows) and the passenger side door (passenger side only).

The electronics inside the controls ensure the operation of the electric window motors which are operated automatically in accordance with the following logic:

- if the button is pressed for between 60 and 300 milliseconds, operation is manual: the glass goes up/down only with the button pressed;

- if the button is pressed for longer than 300 milliseconds, operation is automatic: even if the button is released, the glass continues to go up/down until the end of travel or the implementation of the anti-crush safety system if fitted;

- pressing the button again whilst the window is moving stops it in the position that it is in;

- if the button is pressed for less than 60 milliseconds, this is ignored (it is treated as an accidental knock).

The electronics inside the motors manage the anti-crush safety function: i.e. it acquires information about the possible presence of an obstacle during window closure (rising); the anti-crush function is performed by a Hall effect sensor that senses overloads on the window motor; the intervention threshold is set when the force of the obstacle encountered along the window travel (e.g. a finger, a hand) exceeds 7/8 kg.

The electronic unit automatically reverses the actuator which retracts the window by around 20 mm as required by regulations in force.

In addition, if a fault is detected, the control unit inhibits automatic operation, only allowing it in steps of 500 ms each time the button is pressed.

The Body Computer is connected, via the CAN line, to the instrument panel, to which it sends a signal that turns on the anti-crush safety function failure signal, where necessary.

The power supply logic of the electric window controls is called "comfort enable":

- the electric window function operates only with the ignition on, with the following exception: after a key-off, the windows can be operated for 3 minutes; when this time period elapses, the system no longer acquires new commands.

- if one of the doors is opened during the timed period, new commands are no longer acquired, but any commands received before the opening of the door are brought to a conclusion.

- if one of the doors is already open at key off, any commands received before the opening of the door are brought to a conclusion.

Electric window system initialisation

The following electric window system reset procedure must be performed in the event of:

- supply cut-off: battery replacement or disconnection, protective fuse replacement, etc…

- replacement of any component of the system (motors, electric windows, window housing seals, window panes, etc…)

For each of the fours doors, operate in accordance with the following, ALWAYS USING THE DRIVER'S SIDE FRONT DOOR CONTROLS:

- turn the ignition key to the MAR position;

- press the window closing button in "manual" mode (continuously) until the window is completely closed and keep it pressed for 5 seconds;

- repeat the same procedure for all the other doors. Do not carry out the procedure on more than one door at a time.

The initialisation cycle is complete.

When this procedure has been carried out, the anti-pinch system and the automatic operation of the electric windows are operational.

FRONT ELECTRIC WINDOWS - FUNCTIONAL DESCRIPTION

The Body Computer M001 - pin 5 of connector F - supplies the controls on the driver's side door H051 - pin 6 of connector B - and H050 pin 3 for the passenger side in accordance with the "comfort enable" logic described above: this power supply also lights the LEDs and supplies the controls.

An enablement signal from pin 21 of connector F of M001 is sent to the electronics inside H051 and motors N060 and N061, whilst the power supply is sent, via the line protected by fuses F47 and F48 of M001, from pins 16 and 31 of connector E of M001.

The Body Computer M001 - connector A - receives a direct power supply from the battery through the line protected by maxi fuse F01 of the engine compartment junction unit B001.

The Body Computer M001 receives an ignition-operated power supply (INT) at pin 2 of connector G and an ignition-operated power supply - start-up excluded (INT/A) at pin 9 of connector G.

Pin 11 of connector G of M001 provides the Body Computer with a reference earth.

The control unit H051 manages the operation of the driver's side electric window and sends the commands directly to the motor N060.

The passenger side window controls built into unit H051 are sent again to the control H050 and from this to the motor N061.

FRONT ELECTRIC WINDOWS - WIRING DIAGRAM

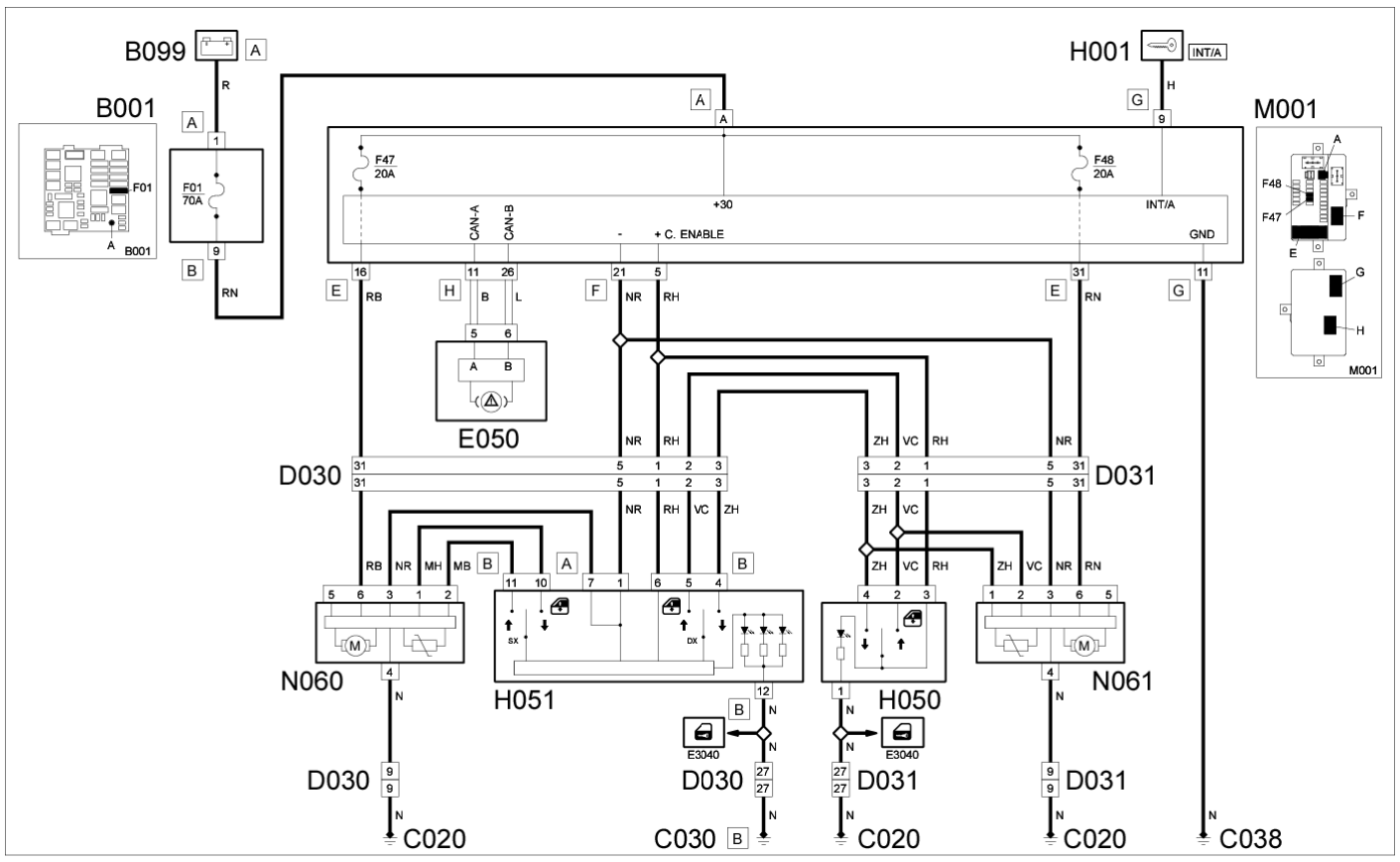

Component Code	Description	Reference to the operation
B001	JUNCTION UNIT	Op. 5505A28 CONTAINER FOR ADDITIONAL JUNCTION UNIT IN ENGINE COMPARTMENT - R.R.
B099	MAXI FUSE BOX ON BATTERY	Op. 5530B40 SUPPLY BOX ON BATTERY (LINK BATTERY AND FUSE BOX) - R R
C020	PASSENGER SIDE DASHBOARD EARTH	-
C030	LEFT REAR EARTH	-
C038	EARTH ON CENTRE TUNNEL	-
D030	LEFT FRONT DOOR COUPLING	-
D031	RIGHT FRONT DOOR COUPLING	-
E050	INSTRUMENT PANEL	Op. 5560B10 CONTROL PANEL - R+R
H001	IGNITION SWITCH	Op. 5520A18 IGNITION SWITCH CONTACT CARRIER LOCK BARREL - R.R.
H050	ELECTRIC WINDOW SWITCH ON FRONT PASSENGER'S DOOR	Op. 7005M12 PASSENGER SIDE FRONT DOOR ELECTRICALLY OPERATED WINDOW SWITCH - R.R.
H051	ELECTRIC WINDOWS AND REAR VIEW MIRROR CONTROLS ON DRIVER'S FRONT DOOR	Op. 7005M14 SWITCH UNIT ON DRIVER'S FRONT DOOR - R.R.
M001	BODY COMPUTER	Op. 5505A35 MAIN BODY COMPUTER/JUNCTION UNIT - R.R.
N060	DRIVER'S FRONT ELECTRIC WINDOW MOTOR	Op. 7005M28 FRONT SIDE DOOR ELECTRICALLY OPERATED WINDOW MOTOR - R.R. WITH DOOR PANEL/SUPPORT FRAME REMOVED
N061	RIGHT FRONT ELECTRIC WINDOW MOTOR	Op. 7005M28 FRONT SIDE DOOR ELECTRICALLY OPERATED WINDOW MOTOR - R.R. WITH DOOR PANEL/SUPPORT FRAME REMOVED

FRONT ELECTRIC WINDOWS - COMPONENT LOCATION

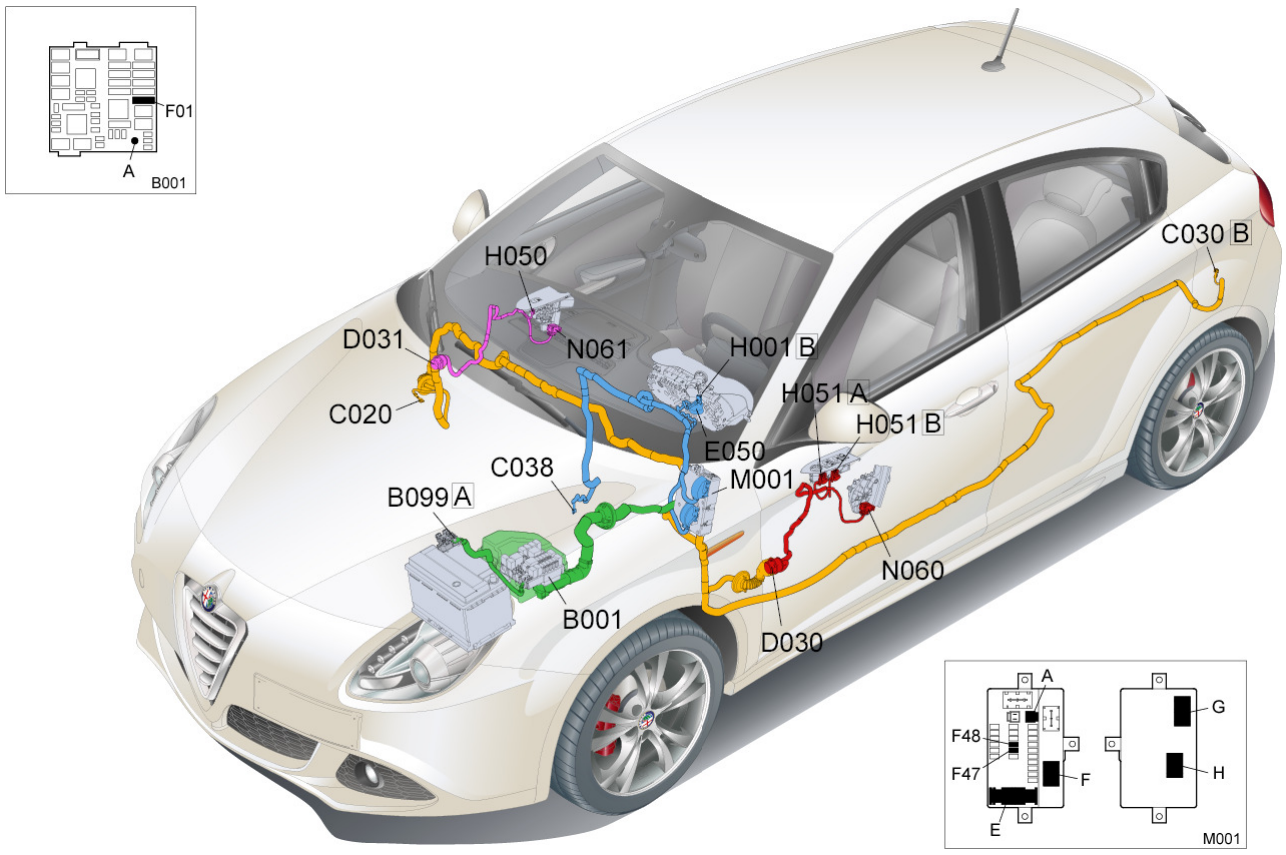

Component Code	Description	Reference to the operation
B001	JUNCTION UNIT	Op. 5505A28 CONTAINER FOR ADDITIONAL JUNCTION UNIT IN ENGINE COMPARTMENT - R.R.
B099	MAXI FUSE BOX ON BATTERY	Op. 5530B40 SUPPLY BOX ON BATTERY (LINK BATTERY AND FUSE BOX) - R R
C020	PASSENGER SIDE DASHBOARD EARTH	-
C030	LEFT REAR EARTH	-
C038	EARTH ON CENTRE TUNNEL	-
D030	LEFT FRONT DOOR COUPLING	-
D031	RIGHT FRONT DOOR COUPLING	-
E050	INSTRUMENT PANEL	Op. 5560B10 CONTROL PANEL - R+R
H001	IGNITION SWITCH	Op. 5520A18 IGNITION SWITCH CONTACT CARRIER LOCK BARREL - R.R.
H050	ELECTRIC WINDOW SWITCH ON FRONT PASSENGER'S DOOR	Op. 7005M12 PASSENGER SIDE FRONT DOOR ELECTRICALLY OPERATED WINDOW SWITCH - R.R.
H051	ELECTRIC WINDOWS AND REAR VIEW MIRROR CONTROLS ON DRIVER'S FRONT DOOR	Op. 7005M14 SWITCH UNIT ON DRIVER'S FRONT DOOR - R.R.
M001	BODY COMPUTER	Op. 5505A35 MAIN BODY COMPUTER/JUNCTION UNIT - R.R.
N060	DRIVER'S FRONT ELECTRIC WINDOW MOTOR	Op. 7005M28 FRONT SIDE DOOR ELECTRICALLY OPERATED WINDOW MOTOR - R.R. WITH DOOR PANEL/SUPPORT FRAME REMOVED
N061	RIGHT FRONT ELECTRIC WINDOW MOTOR	Op. 7005M28 FRONT SIDE DOOR ELECTRICALLY OPERATED WINDOW MOTOR - R.R. WITH DOOR PANEL/SUPPORT FRAME REMOVED